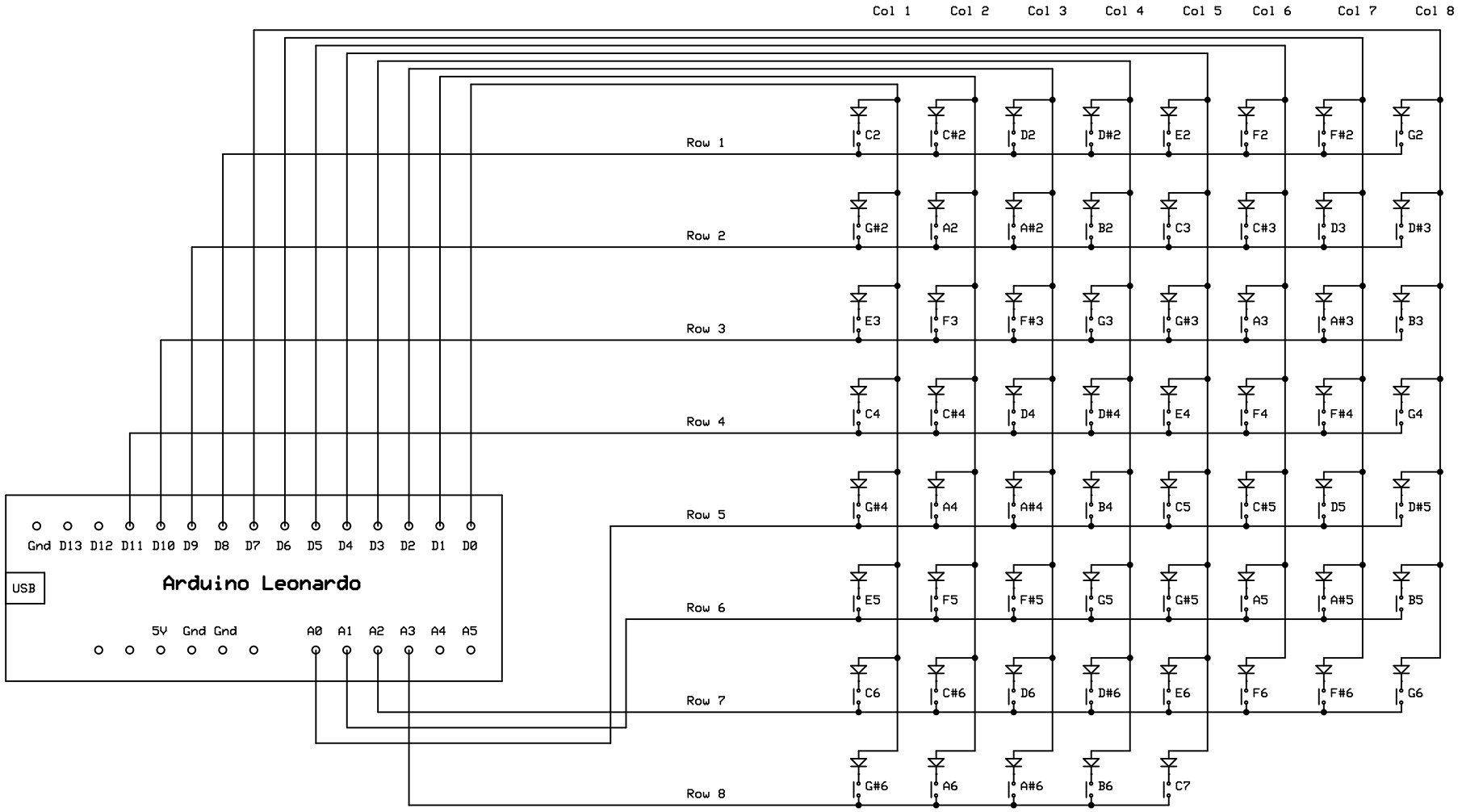

Arduino internal input pullup resistors are 20-50K

Hauptwerk Conversion		
Keyboard Switch Matrix		
John Harvey	Rev 1.0 14 July 2021	Page 1 of 1